** NOTE **
DIMENSIONS ARE APPROXIMATE +/- 1/4"
NOT FOR FIELD FIT-UP

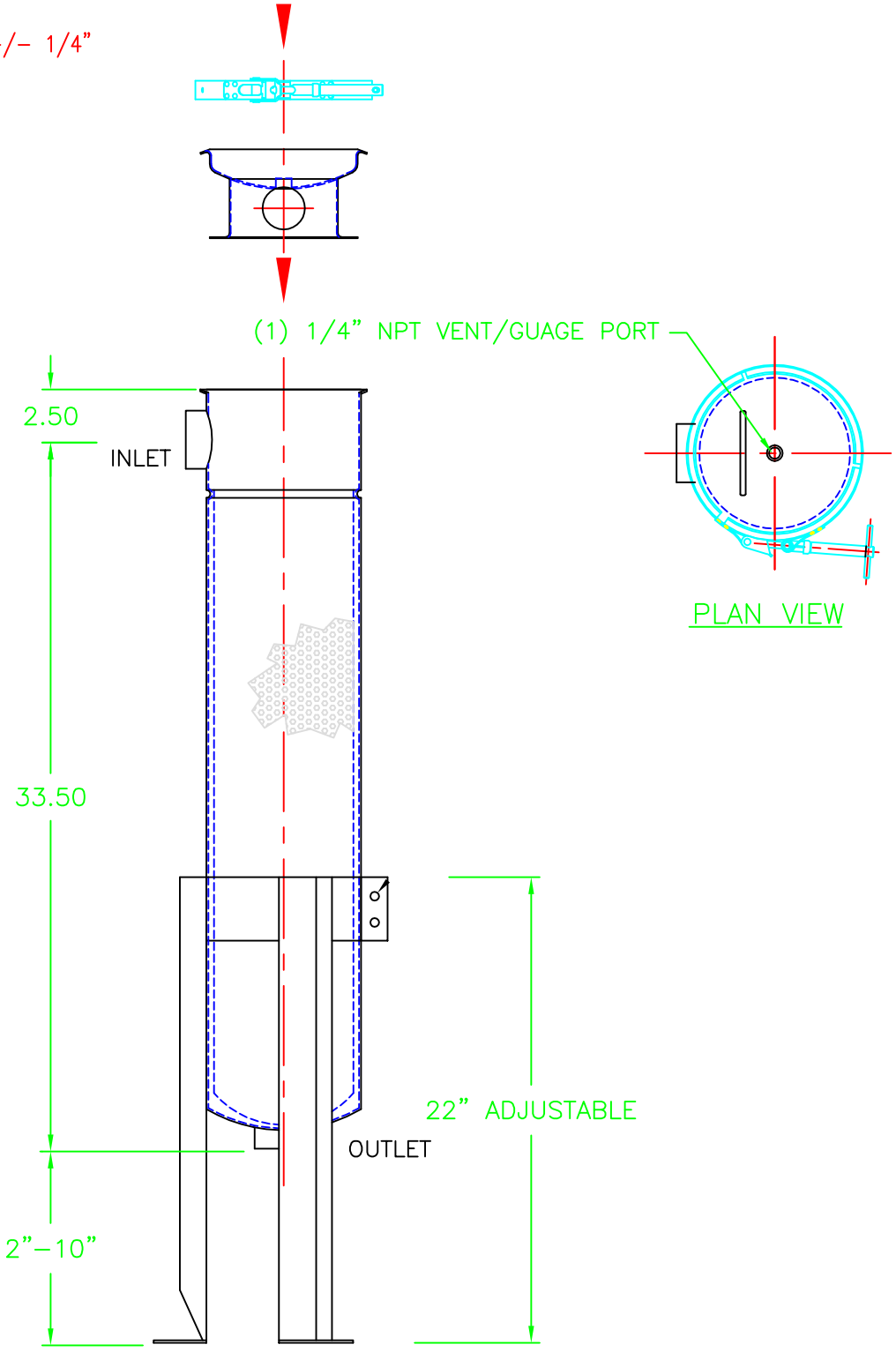

BILL OF MATERIAL

#	QTY.	DESCRIPTION	MAT'L

DESIGN INFORMATION

REVISION LOG

LTR	DESCRIPTION	DATE	INIT.

SUPERIOR FILTERS, INC.
ASSEMBLY DRAWING

DRAWN BY: JEC	FILE NAME:
APPR BY:	ITEM NUMBER:
DATE:	PART NUMBER: SFC07-01-30-QC-304-2P-125-01-B-B-N
SCALE: NONE	