** NOTE **
DIMENSIONS ARE APPROXIMATE +/- 1/4"
NOT FOR FIELD FIT-UP

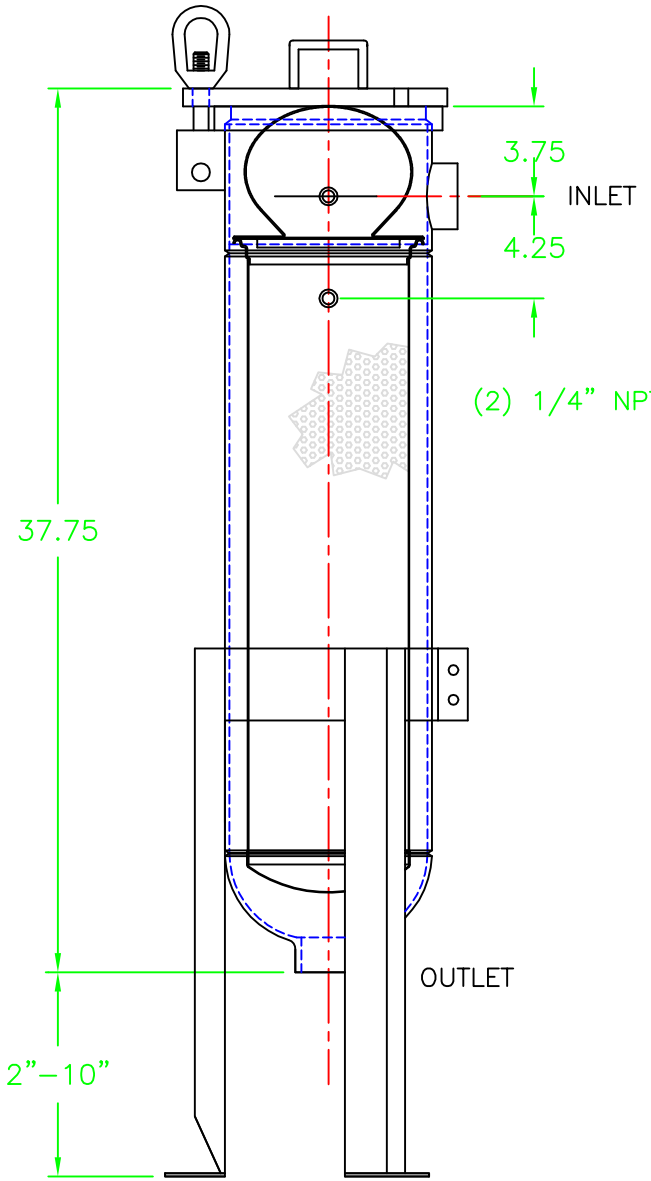


(2) 1/4" NPT VENT/GUAGE PORT

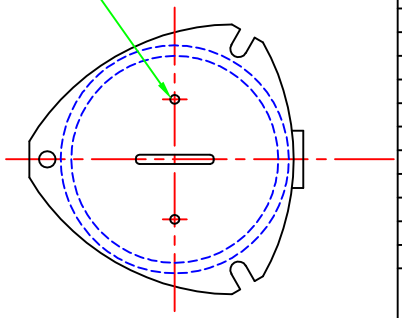

TOP VIEW

BILL OF MATERIAL

| # | QTY. | DESCRIPTION | MAT'L |
|---|---|---|---|

DESIGN INFORMATION

REVISION LOG

| LTR | DESCRIPTION | DATE | INIT. |
|---|---|---|---|

SUPERIOR FILTERS, INC.
ASSEMBLY DRAWING

| | |
|---|---|
| DRAWN BY: JEC | FILE NAME: |
| APPR BY: | ITEM NUMBER: |
| DATE: | PART NUMBER: SFC08-01-30-3L-304-2P-150-01-B-B-N |
| SCALE: NONE | |